RAIRO-Oper. Res. 58 (2024) 327–339
https://doi.org/10.1051/ro/2023110

RAIRO Operations Research
www.rairo-ro.org

RESEARCH ON INVENTORY REPLENISHMENT STRATEGY OF SUPPLY CHAIN BASED ON SPN

Wenjun Pan[1] and Lin Miao[2,*]

Abstract. The warehousing and replenishment strategy of supply chain is comprehensively affected by various factors such as supply chain structure, demand change, supply source, inventory state. Supply chain warehousing replenishment is full of uncertain factors, in order to achieve the optimal replenishment process and the best replenishment strategy effect, this paper uses SPN(Stochastic Petri net) to build the supply chain warehousing replenishment model. Based on the basis of the traditional replenishment process, this paper optimizes the new supply chain warehousing management process, optimizes the priority management measures of goods in the process of supply chain warehousing replenishment process, designs the new replenishment strategy algorithm and designs the replenishment strategy function analysis. Using SPN model, this paper intuitively shows the warehousing management process, and describes the dynamic changes of warehousing replenishment in detail. Through the implementation of different warehousing replenishment strategies to solve the influencing factors of uncertainty, so as to avoid the problem of various supply chain warehousing shortage caused by poor warehousing management. Finally, by comparing the traditional warehouse management strategy and the SPN model optimization of the supply chain storage strategy, the research result shows that the SPN replenishment strategy model is more efficient than the traditional warehouse replenishment strategy model.

Mathematics Subject Classification. 90B50, 91A80.

Received June 26, 2018. Accepted July 20, 2023.

1. Introduction

In recent years, with the frequent transportation of goods between supply chain enterprises, the ability of logistics warehousing management has become an important factor restricting the development of supply chain. In addition, with the rapid development of e-commerce and the accompanying emergence of various online direct selling methods, the cooperation between dual-channel supply chain enterprises has increased significantly, requiring a single manufacturer and multi-channel suppliers to form joint inventory management. The complexity of supply chain inventory management is aggravated by uncertainties such as the operation level of production enterprises, the supply capacity of suppliers, the logistics cost of warehousing and delivery, and the change of consumer demand [12]. Due to customer demand and business change, the traditional storage

Keywords. Supply chain, warehouse management, replenishment strategy, stochastic petri net (SPN).

[1] School of business administration, Huaqiao University, Quanzhou 362021, P.R. China
[2] College of Management and Economics, Tianjin University, Tianjin 300072, P.R. China.
*Corresponding author: 1403807830@qq.com

mode is gradually transformed into the supply chain storage mode, compared with the traditional warehouse, supply chain warehouse management reflects many advantages, including optimization ability, responsiveness, agility, scalability and user friendliness, and automation vehicles, the Internet of things, sensors, COBOTS and augmented reality technology to the concept of supply chain storage to an unprecedented height. Warehouse management involves multiple business entities, such as suppliers, manufacturers and customers, so it is necessary to be precise in process and logistics coordination. In addition, it is also necessary to track and update real-time information to understand market dynamics, thus further help the supply chain in inventory management decision [4,6].

The research on supply chain inventory and replenishment strategy at home and abroad mainly focuses on in storage layout optimization, operation process optimization, storage management effect evaluation and other aspects[2, 13]. There are different allocation strategies for the research on inventory replenishment strategy, mainly as follows: Approximate proportional allocation [5], priority allocation [16], linear allocation strategy [17], balanced inventory strategy [30], revised hierarchical allocation strategy [11], proportional strategy [21], inventory allocation considering newsboy problem and customer classification [24], fuzzy mechanism of inventory allocation [31], drop-shipping and retailer shipping [23], inventory allocation strategy considering selective information sharing [10], etc. Alptekingoglu studies that centralized inventory has a higher service level than decentralized inventory when demand is random and independently and equally distributed [1]. van der Gaast *et al.* [29] used deep neural nets to build an order picking system for warehouse management, and designed different parameter coefficients to meet different customer order requirements [29]. Perotti *et al.* [22] proposed the conceptual framework of warehouse logistics 4.0, and he believed that warehouse process optimization is an important content of warehouse management [22]. Garcia *et al.* [9] used adaptive control method to optimize inventory size under uncertain delivery period [9]. Schmitt *et al.* [26] conducted a simulation-based study to evaluate the performance of supply chains in terms of effectiveness and efficiency under delivery cycle disruption [26]. Sawik [25] proposed a combinatorial stochastic model to optimize efficiency and effectiveness under disrupted delivery cycles. These studies evaluated the impact of delivery cycle disruptions on performance indicators such as inventory levels, service levels, and costs [25]. In the context of imprecision and inflation, Padiyar *et al.* studied the joint replenishment strategy of multi-item deterioration in the multi-level supply chain model with incomplete production, the results show that that if the number of shipments taken from the supplier increases during the production period, the total profit increases in crisp and fuzzy. If a positive change occurs in the number of shipments received through the producer to the retailer, then the fuzzy model has positive, but a slight negative change occurs in the crisp model [20].

When considering the above random influencing factors of supply chain replenishment strategy, some scholars can effectively deal with the supply chain system risk by switching inventory control strategy, same-level and non-same-level hybrid inventory emergency strategy and hybrid inventory dynamic management strategy among node enterprises across the chain [7,14], which is more in line with the actual operation situation of the current multi-channel supply chain. In view of the impact of uncertain factors on supply chain inventory, it is necessary for upstream and downstream enterprises of the supply chain to cooperate to meet terminal demand and reduce total inventory cost through joint replenishment [27].

With the common practice of supply chain management, the inventory and replenishment strategy of supply chain will be more affected by uncertain factors such as channel, demand and time [18,19]. At present, there are few researches on the dynamics of warehouse inventory and replenishment strategy of supply chain. Therefore, taking the uncertain factors of supply chain inventory management as the starting point, this paper studies the supply chain inventory replenishment problem. Firstly, the process of supply chain inventory control and replenishment based on time constraint is sorted out, and the algorithm of supply chain hybrid inventory replenishment strategy is designed. Secondly, the process of supply chain warehouse management is described by timed colored Petri net, and the function analysis of supply chain warehouse replenishment strategy is carried out. The main contributions of this paper are as follows: (1) Stochastic Petri net (SPN) is used to construct the supply chain inventory replenishment model for the first time, which is a new replenishment strategy model; (2) Based on the supply chain warehouse replenishment model of SPN, this paper designs the corresponding

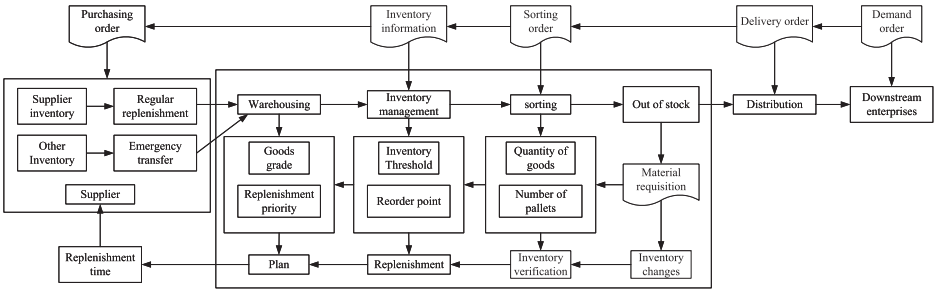

FIGURE 1. Schematic diagram of the supply chain warehouse management process.

warehouse replenishment strategy algorithm based on the matching of supply chain inventory state threshold setting and replenishment time process, and sets the function formula of the corresponding process in the algorithm to effectively improve the efficiency and accuracy of warehouse replenishment; (3) Numerical example analysis is carried out. By comparing the traditional warehouse replenishment model and SPN replenishment strategy model, the deficiency of the comparative study between the traditional warehouse replenishment model and the existing replenishment model based on process optimization in the existing literature is supplemented.

2. Supply chain warehousing analysis and replenishment strategy algorithm design

2.1. Supply chain warehouse management process design

Compared with enterprise warehouse management based on production or sales plan operation, supply chain warehouse management has obvious differences in warehouse process, inventory coordination, replenishment strategy and other aspects. The warehouse management of supply chain mainly faces the following random conditions: (1) the change of terminal consumption demand leads to the change of warehouse inventory and the uncertainty of replenishment frequency and quantity; (2) When the supplier is the single supply source of the warehouse, the delivery time of the warehouse replenishment and the quantity of the delivered products will change due to the random fluctuation of the supplier's supply; (3) Setting up multiple inventory points (stocking in peripheral warehouses other than a single supplier) in response to emergencies, resulting in different replanted requirements under the mixed inventory strategy [15, 32].

Supply chain storage management is oriented to many upstream and downstream subjects, and the random fluctuation of its inventory changes very greatly. This paper extends the supply chain warehouse management process on the basis of the traditional warehouse management process, as shown in Figure 1. Among them, other inventory is introduced as the emergency transfer reserve beyond the routine replenishment of the supplier before the warehousing process; warehousing shall classify the stored goods and determine the priority of replenishment; Set the threshold control to the inventory status, effectively trigger the reorder point for replenishment; Set the quantity of goods and the required number of pallets during the outbound sorting, and handle the changes of inventory; the warehouse replenishment plan shall determine the replenishment time control source according to the downstream demand.

2.2. Analysis of the characteristics of supply chain warehousing and replenishment

As there are many kinds of goods in the warehouse, according to the key customers and the nature of the goods, the important level of goods in the warehouse is divided and the replying priority is further divided, which helps to optimize the inventory management and replying response. In general, the priority of replenishment of goods that meet the constraints of high consumption rate and low inventory level is the highest. The priority

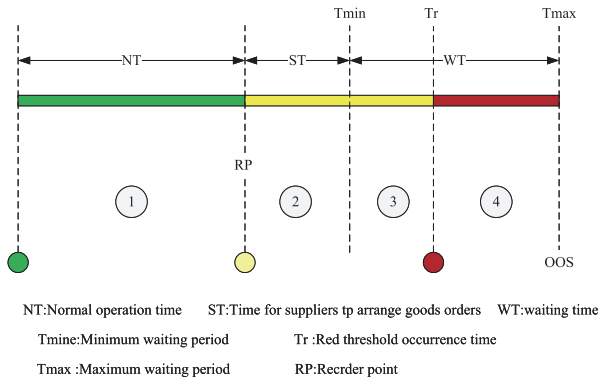

FIGURE 2. Schematic diagram of inventory status threshold setting and replenishment time flow.

of replenishment of key goods is to avoid the delay of delivery of key customers' orders so as to trigger the safety inventory threshold. Replenishment priority depends on the following factors: 1) consumption rate of goods; 2) Replenishment time; 3) Minimum inventory level; 4) The value of the goods; 5) Ability to deal with emergencies; 6) The difficulty of purchasing goods. Among them, the first three indicators are the basis for calculating the inventory standard, and the last three are related to the characteristics of the goods themselves and the suppliers. The most important part of the supply chain warehouse management process is to determine the reorder point, which is affected by the sum of the minimum inventory level and the safety stock level of goods. If the calculation results based on the first three indicators are the same, it is necessary to compare the second time according to the last three indicators to determine the replenioring.

Different inventory status requires different supply chain inventory replenishment plans, which can be labeled with different colors according to the inventory status. The warehouse inventory status of the supply chain affects the replenishment schedule, that is, there is a correlation between the warehouse inventory threshold setting of the supply chain and the replenishment time setting, as shown in Figure 2. The minimum inventory starts to be consumed, triggering the warehouse replenishment schedule. This paper does not consider the time when the supplier (supplier) receives the warehouse purchase order.

Part 1: The inventory status is marked as green when the goods are sufficient, and the green threshold period means that the normal operation of the warehouse does not require replenishment.

Part 2: The inventory status after the warehouse inventory reaches the reordering point is marked as yellow. The replenishment with the minimum inventory consumption starts to the yellow threshold trigger period. If the goods fail to be stored before the time point, the warehouse needs to re-initiate the replenishment order request to the supplier.

Part 3: When the warehouse has consumed the surplus to the minimum inventory, appropriate decisions must be taken according to the supplier's order response. There are the following situations: 1) If the supplier confirms that the goods can be delivered within the time [Tmin, Tr], the warehouse must wait for the replenishment order goods; 2) If the supplier is unable to deliver goods within the specified time Tr, the warehouse needs to consider transferring goods from other nearby warehouses to replenish the inventory. At this time, special attention should be paid to the priority of replenishing the goods with higher priority before the point, so as to avoid entering the serious shortage of stock quantity marked in red.

After taking the action of transferring goods from nearby warehouses, warehouse managers need to decide whether to cancel or postpone the replenishment orders previously sent to suppliers (depending on the current inventory level of the warehouse) to avoid the inventory backlog in the warehouse. Among them, the cancellation of goods orders only occurs when the surrounding warehouse can provide

enough goods; When the temporary replenishment of the surrounding warehouse can only support a period of time, the management personnel need to take measures to postpone the delivery time of the replenishment order of the supplier. At this time, the specific delivery time of the supplier is determined according to the support time of the existing goods inventory, so as to calculate the most appropriate delivery time.

Part 4: When the warehouse cannot obtain the emergency demand goods through the temporary allocation with other surrounding warehouses, the safety inventory begins to be consumed, thus triggering the red threshold; And within the time [Tr, Tmax], the supplier must immediately deliver the order in any case.

2.3. Design of supply chain warehouse replenishment strategy algorithm

Considering the influence of random factors related to supply chain replenishment, according to the inventory status of supply chain warehousing and replenishment scheduling process, this paper designs a supply chain replenishment strategy algorithm. The specific steps are as follows:

Step1: Set different thresholds of goods inventory status, and determine the replenishment priority strategy for different goods of different important levels;

Step2: When the goods inventory is within the green threshold range, the goods inventory meets the requirements of normal delivery of the warehouse;

Step3: When the continuous inventory consumption causes the yellow threshold to trigger, the replenishment plan is initiated to the supplier, where:

(a) If the supplier can deliver the goods in [Tmin, Tr], wait until replenishment and transfer to Step5;

(b) If the supplier cannot deliver the goods in [Tmin, Tr], transfer the goods from the nearby warehouse; If the nearby warehouse is sufficient, cancel the supplier to avoid the backlog and wait for the replenishment to the nearby warehouse and transfer to Step5;

Step4: The supplier and the nearby warehouse do not enter the [Tr] time in time, and the safe inventory consumption starts to trigger the red threshold, so they need to urge the replenishment from the supplier. At the same time, other replenishment strategies are adopted to ensure that the replenishment can be completed (within [Tmax]) before the safe inventory is consumed. After the inventory replenishment is completed, go to Step5; otherwise, transfer to Step6.

Step5: The warehouse management system completes the replenishment task. After the inventory replenishment is completed, the warehouse will operate normally and go to Step2.

Step6: If the downstream delivery task terminates due to the shortage of goods, must wait for replenishment until the replenishment is completed and then transfer to Step2.

3. Design of supply chain inventory replenishment model based on SPN

Petri net has the ability of mathematical and graphical representation, which is applied to supply chain system modeling for system performance analysis and system optimization. It proves that Petri net is an effective tool for supply chain modeling. It is not enough to optimize the structure of supply chain replenishment management only. It also needs to better control the replenishment process. In general, Petri nets are difficult to accurately express random phenomena in warehouse inventory and replenishment management of supply chain. Therefore, the application characteristics of various Petri nets are comprehensively analyzed, and the improved time-colored Petri nets are adopted to describe the warehouse process of supply chain [28], and the key links of inventory and replenishment are modeled to analyze the replenishment strategy of supply chain.

3.1. Description of supply chain warehousing management process

In order to distinguish the conventional stock from the safety stock, the single warehouse without traditional spatial layout is divided into two areas: the conventional warehouse and the emergency stock warehouse. Among

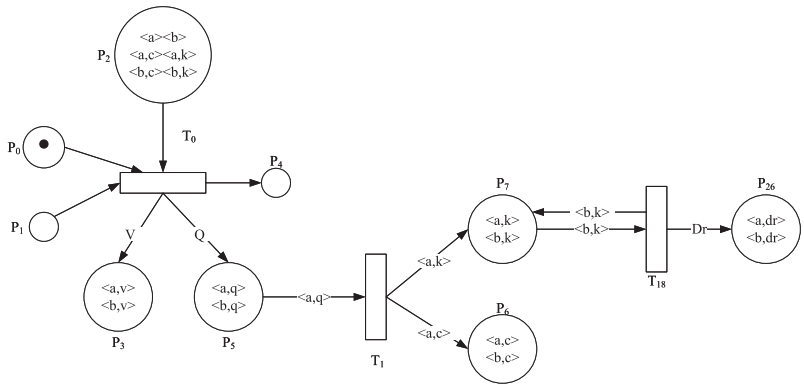

FIGURE 3. Petri nets model of supply chain inventory management process.

them, the conventional warehouse refers to the normal supply goods stacking area, the goods and packaging with color ⟨a⟩, ⟨b⟩. Emergency stock warehouse refers to the safety stock storage area, whose goods and packaging are marked with colors ⟨e⟩ and ⟨h⟩. Emergency stock warehouse refers to the safe inventory storage area, and its goods and packaging are marked by color. Here, ⟨a⟩ and ⟨b⟩ ⟨b⟩ and ⟨h⟩ may be the same product and packaging, just set to distinguish between different warehouses. Goods data recorded in the delivery and storage MS are marked with colors ⟨c⟩ and ⟨k⟩, respectively.

The supply chain warehouse management process starts from the delivery order and leads to the change of inventory through the collection of materials. Then the delivery task is generated according to the delivery demand order and material receipt, and the replenishment plan is promoted according to the inventory change; Finally, the task is pushed to the downstream delivery and transportation. The main links and process structure of SPN-based warehouse management in supply chain are shown in Figure 3. When the inventory consumption is serious, the red inventory threshold is triggered, and the warehouse system is required to do emergency replenishment.

The delivery order P_0 is generated, and the warehouse manager gets a certain amount of goods $\langle a \rangle$ and corresponding packaging $\langle b \rangle$ from the warehouse P_2 according to the material requisition list P_1. When the transition T_0 (material requisition) is triggered, the delivery task P_4 is completed. At the same time, the storage system calculates the consumption rate of inventory goods and packaging P_3, as well as the cumulative consumption of goods and packaging bags P_5. When the batch of goods $\langle a \rangle$ consumes a certain amount, the transition T_1 (inventory) occurs, and the goods $\langle a \rangle$ and packaging data $\langle b \rangle$ are entered through the warehousing system and recorded on the existing inventory P_7. At the same time, the transport equipment ⟨c⟩ is prepared at the delivery P6. The red threshold P_7 will be controlled according to the recorded inventory quantity. Once the existing inventory exceeds the safety stock level (S_s), the red threshold will be triggered to make a transition T_{18} (emergency replenishment), and the replenishment inventory quantity Dr triggered when the emergency replenishment P_{26} is recorded.

3.2. Model construction of supply chain warehouse goods priority management strategy

The ordering strategy determines different replenishment priorities according to the importance of the inventory goods, so the goods priority management strategy discussion needs to be strengthened in the warehouse management process. The priority management of goods was selected for detailed analysis, and the Petri model is shown in Figure 4.

P_8 indicates that the warehouse is in the normal supply and inventory, P_{16} represents the safety stock in emergency stocking warehouses, the triggers of T_2 and T_6 represent normal inventory consumption and safe inventory consumption, respectively. According on the number of inventory of P_8 or P_{16} and the rate of

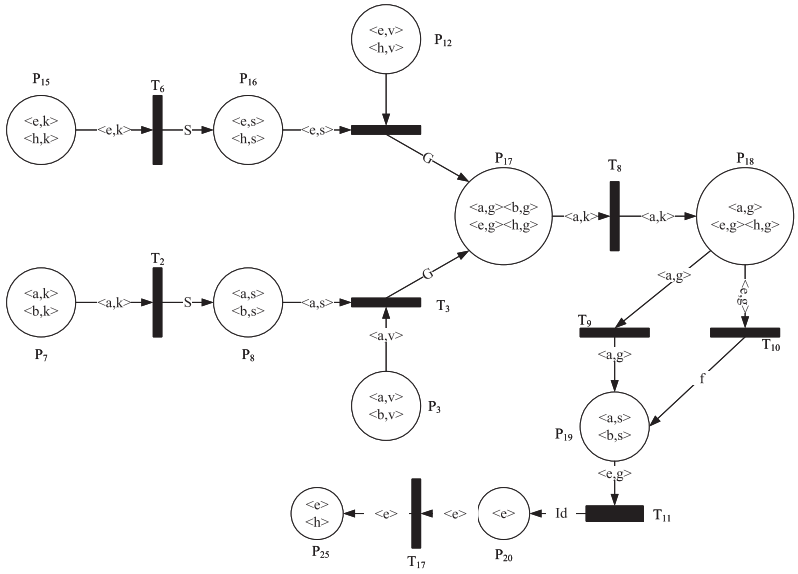

FIGURE 4. The goods priority management strategy Petri model.

consumption of $\langle a \rangle$, $\langle e \rangle$, when inventory changes trigger T_3, the inventory support time P_{17} of various items is calculated through the G function. Once the function G value is obtained by trigger T_8 to select the P_{18} value. At this stage, one of the trigger sequence $\{T_9, T_{10}\}$ is judged according to the quantity of the remaining inventory. When the inventory $\langle a \rangle$ can still be maintained for a period of time, the change T_9 will occur, otherwise the change T_{10} occurs directly. Count the safe inventory $\langle e \rangle$, and the maintenance time can be calculated, so as to calculate the minimum value P_{19} of the G value. Finally, the minimum value P_{20} of function I_d corresponds to the function G is obtained by the trigger T_{11}, and the data is recorded in P_{25} through the change T_{17}.

3.3. Construction of supply chain warehousing and replenishment strategy model

The replenishment strategy refers to the supplier and the surrounding warehouse taking the corresponding strategies when different inventory thresholds are triggered, and the specific Petri model is shown in Figure 5. On the right part corresponds to the Step2-Step4 process; on the left indicates the recording process when the red threshold triggers: the change P_{37} occurs, the inventory red threshold P_{37} is calculated, P_{23} indicates that the warehouse is short of inventory type, P_{38} is the number of out of stock. Only by storing a certain amount of goods in the warehouse P_0 and no longer having a new record in P_2, can occur and obtain a new record.

4. Function analysis based on SPN

The above SPN model is established based on a certain period of time, where the color represents the number of any tokens to avoid the digital model confusion, and represents the evolution of the markers; representing the dynamic changes of the main supply chain warehousing process through the change. The following mathematical function is used to quantify the [8] of the change and dynamic change process between the libraries in the Petri net, so as to more clearly reflect the state when the change occurs.

For warehouse storage goods, the storage time calculation constraint is set to: in the constraint time t, the duration of the inventory dimension at a certain consumption rate. Assuming X is a goods set, A is a subset of X ($A \subset X$), A represents the choice of priority goods in the constraint time t, and finally determines the highest goods type of replenishment priority. Set T as a collection of t, during which the warehouse is in normal

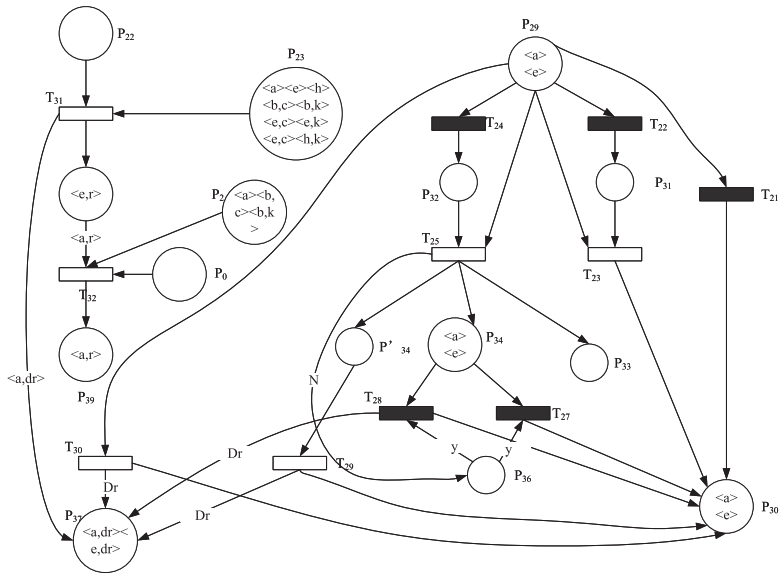

FIGURE 5. Supply chain warehousing and replenishment strategy Petri net model.

operation condition. Specific parameters include: consumption rate V, minimum inventory level $S_{\min}$, safety inventory level $S_{\min}$, priority management of goods R_{pr} ($R_{pr} = \{x^*\}$), and the first three parameters change over time.

Set in the t time, warehouse goods X duration function G, can obtain:

$$G(x,t) = S(x,t)/V(x,t). \tag{1}$$

Use the function F to describe the cargo priority management order, including:

$$F : X * T- > X, \quad F(A,t) = \{x^*/Min_A G(x,t) = G(x*,t)\}. \tag{2}$$

Set the consumption rate V function:

$$V : X * T- > IR+. \tag{3}$$

Where, for the parameter $X : V(x,t) = wx/d_0$.

The consumption rate of the parameters varies over time, for example: within $[d_0 + t]$, three kinds of goods have to be delivered, so $V(x, d_0 + t) = \left[\sum_1^3 wx(pt)\right]/d_0 + t$, times $((d_0 \text{ and } d_0 + t))$ are occur at T_0. Set the consumption quantity function Q, the quantity of goods consumed in the inventory changes in a certain period of time with the amount of delivery, then: $Q : X * T- > IN$, and:

$$Q(x,t) = \sum_1^{npt} wx(\Omega). \tag{4}$$

Where, npt is the number of products delivered at this time, The WX is the weight of the parameter x.

The parameter x functions triggering the red threshold, yellow threshold and green threshold are as follows:

$$Dr(< x,k >) = \begin{cases} 1, & If < x,k > \ set\ number \le S_s. \\ 0, & If\ not \end{cases} \tag{5}$$

TABLE 1. Basic information of the warehouse.

Goods type	Total storage volume (ton)	Routine warehouse (ton)	Emergency stocking warehouse (ton)	Consumption rate (ton/day)
A	2000	1700	300	20
B	4000	3400	600	25
C	6000	5200	800	40

$$Dv(< x, k >) = \begin{cases} 1, If < x, k > set\ number \leq S_{\min}. \\ 0, \quad If\ not \end{cases} \tag{6}$$

$$Ds(< x, k >) = \begin{cases} 1, If < x, k > set\ number \leq (S_{\min} + S_{\mathrm{s}}.) \\ 0, \quad If\ not \end{cases} \tag{7}$$

Function S is used to calculate the inventory levels that trigger the yellow threshold $(S_{\mathrm{s}} + S_{\min})$, S varies over time, and defines S:

$$S : X * T- > IN : S(x, t) = S_S(x, t) + S_{\min}(x, t). \tag{8}$$

Function I_d corresponds to the minimum value of function G, as defined by:

$$I_d : I_R + - > A : I_d(\min) = \{< x^* >\}. \tag{9}$$

The function f determines the minimum value of additional complex colors $< x, g >$ and $< y, g >$, x and y are a given parameter, so there are:

$$f\,(< x, g >, < y, g >) = \begin{cases} < x, g >, If < x, g > \leq < y, g > \\ \qquad < y, g >, If\ not. \end{cases} \tag{10}$$

According to the inventory state changes in the supply chain warehouse management process, the mathematical model representing different meanings is added to the corresponding Petri net and built into an integrated model. The consumption rate V of different goods and the consumption quantity Q are determined by the consumption quantity Q, and the inventory level $(S_s + S_{\min})$ is determined according to the three-color threshold to determine the future duration of the goods $G\,(x, t)$. At the same time, the goods are divided into different priorities, and the replenishment plan is reasonably arranged to weaken the influence of uncertain random factors and avoid safety inventory consumption, so as to reduce or avoid the phenomenon of supply chain warehouse management interruption.

5. Example analysis

Supply chain warehouse management involves more processes, in order to more effectively analyze the performance of supply chain warehouse replenishment strategy, this paper simplifies the Petri net model (as shown in Fig. 5), only consider the algorithm Step3-Step5 corresponding model, and the goods consumption rate and warehouse storage is unchanged for a certain period of time, and further analyze the role of the constructed model through numerical examples. Assuming that the total warehouse reserves of a storage and distribution center are 12,000 tons, and there are A, B, and C goods, and the total storage volume of the conventional inventory and safety inventory of these three goods is 10,300 tons and 1,700 tons, λ indicates the delay (time delay) coefficient. The details are shown in Table 1. Table 2 sets the symbol of the SPN model element:

(1) SPN replenishment model

TABLE 2. SPN model element symbol setting.

Change	Meaning	A replenishment delay factor	B replenishment delay factor	C replenishment delay factor
T_{21}	The supplier timely replenishment within $[T\min, Tr]$	$\lambda_{21} = 2$	$\lambda_{21} = 1$	$\lambda_{21} = 1$
T_{22}	The supplier delayed replenishment within $[T\min, Tr]$	$\lambda_{22} = 0.5$	$\lambda_{22} = 2$	$\lambda_{22} = 0.5$
T_{23}	Continue to wait for replenishment withinthe supplier replenishment	$\lambda_{23} = 2$	$\lambda_{23} = 0.5$	$\lambda_{23} = 0.5$
T_{24}	The supplier responded with no replenishment	$\lambda_{24} = 1$	$\lambda_{24} = 2$	$\lambda_{24} = 2$
T_{25}	Timely transfer of goods from the surrounding warehouses	$\lambda_{25} = 1$	$\lambda_{25} = 1$	$\lambda_{25} = 2$
T_{26}	Make sufficient quantity to cancel supplier orders	$\lambda_{26} = 1$	$\lambda_{26} = 1$	$\lambda_{26} = 0.25$
T_{27}	Continue to urge the supplier if the transfer quantity is insufficient	$\lambda_{27} = 0.5$	$\lambda_{27} = 1$	$\lambda_{27} = 1$

According to the SPN replenishment model set in this paper, the replenishment scheme in various situations is formulated for the replenishment status in three different situations, expanded synchronously in parallel, and solved by substituting equation (1)–(10). When warehouse A goods are insufficient, the standard time ST is $T_1 = E(Y_1) = \frac{1}{\lambda_{21}} = 0.5$(d); when the supplier cannot timely replenish, the time consumed when the buffer time is required is $T_2 = E(Y_2) = \frac{1}{\lambda_{22}} + \frac{1}{\lambda_{23}} = 2.5$; when transferring goods from the surrounding warehouses, its consumption time is $T_3 = E(Y_3) = \frac{1}{\lambda_{24}} + \frac{1}{\lambda_{25}} + \frac{1}{\lambda_{26}} + \frac{1}{\lambda_{27}} = 5$. From the perspective of the longest order time $\mathrm{Max}(T_1, T_2, T_3) = T_3 = 5$, it can be found that the maximum time consumption of the whole replenishment process from the beginning of the order up to the completion of the order is 5 days. Similarly, the longest replenishment completion time for B and C products is 2 days and 3.4 days, respectively.

According to Table 1, the safety inventory of the A, B and C goods can be maintained for 15 days, 24 days and 20 days, respectively, and the minimum inventory of the three categories of goods is 200 tons, 250 tons and 400 tons, respectively.

Through the three angles of goods consumption rate, replenishment time and minimum inventory level, the replenishment priority of A, B and C goods is A > C > B respectively, and the order advance period of A, B and C goods is 17.45 days, 26 days and 23.4 days, and the reordering point RP can be obtained from equation (8) is 349 tons, 650 tons and 936 tons respectively.

(2) Traditional warehousing and replenishment strategy

Generally, the traditional replenishment strategy is to wait for the supplier to supply. When the supplier fails to complete the delay of supply, the cargo transfer measures are taken (as shown in Fig. 6), and the warehouse management process is relatively simple. In this paper, the delay coefficient λ is converted to the delay coefficient λ' under the traditional replenishment strategy according to Table 2. Time delay coefficient

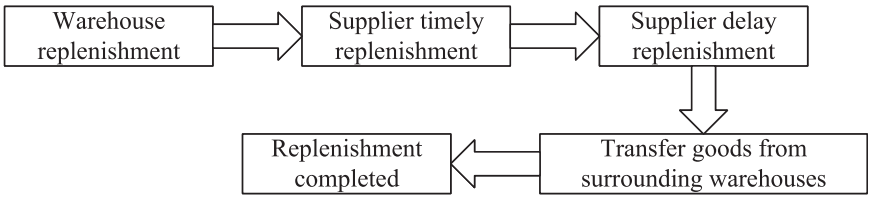

FIGURE 6. Traditional warehouse management and replenishment strategy.

TABLE 3. Comparison of Traditional and SPN replenishment strategies.

Goods type	Traditional replenishment strategy		SPN replenishment strategy	
	Advance advance cycle (days)	Reorder point (ton)	Advance advance cycle (days)	Reorder point (ton)
A	23	460	17.45	349
B	31	775	26	650
C	31	1240	23.4	936

of timely replenishment by suppliers $\lambda'_1 = 2$, the delay coefficient of delayed replenishment of the supplier $\lambda'_2 = \left(\frac{1}{\lambda_{22}} + \frac{1}{\lambda_{23}}\right)^{-1} = \frac{2}{5}$ can be obtained by the merger of change T_{22} and T_{23}, the delay coefficient of adjustment in surrounding warehouses $\lambda'_3 = \left(\frac{1}{\lambda_{24}} + \frac{1}{\lambda_{25}} + \frac{1}{\lambda_{26}} + \frac{1}{\lambda_{27}}\right)^{-1} = \frac{1}{5}$ can be obtained by the merger of change T24, T25, T26 and T27. Since the traditional replenishment strategy is a series result, the ordering time is considered from the longest time. According to the delay coefficient, the maximum series system expected delay is $T = \frac{1}{\lambda_1} + \frac{1}{\lambda_2} + \frac{1}{\lambda_3} = 8$(days), that is, the maximum time spent by the entire replenishment process from the order start to the completion of the order is 8 days. Similarly, it can be calculated that the replenishment time of both B and C products is 7 days and 11 days, respectively. Therefore, according to the consumption rate of A, B and C goods, the consumption in the replenishment stage is 160 tons, 175 tons and 440 tons respectively, so the order inventory is 460 tons, 775 tons and 1240 tons respectively, and the order advance period of safety inventory consumption time is 23 days, 31 days and 31 days respectively.

Through the comparison of traditional warehousing replenishment strategy and SPN replenishment strategy (see Tab. 3), it is known that the replenishment advance cycle of traditional replenishment strategy is generally higher than that of SPN model, which shows that SPN replenishment strategy has higher efficiency and is faster in the processing of replenishment orders. Another traditional replenishment strategy of reordering point inventory is higher than the SPN replenishment strategy model, and in the process of warehouse management is often need to maximize the realization of goods circulation, in order to achieve the maximum benefit, so the lower reordering point can release more safety inventory, makes the warehouse management operation efficiency is higher, this shows that the SPN replenishment strategy model is better than the traditional warehouse replenishment strategy model.

6. CONCLUSION

At present, as the supply chain structure becomes more and more complex, the requirements for storage and distribution response capacity are becoming higher and higher. Therefore, it is of strong practical significance to implement supply chain storage level management to cope with the uncertain decision environment of supply and demand. In the supply chain warehousing management, different warehousing and replenishment strategies are formulated according to the important level of goods and the inventory shortage response level. Given

that the Petri net model can intuitively describe the storage process and describe the dynamic changes of the replenishment system, and considering the uncertainty factors of the supply chain warehouse ordering strategy, this paper adopted SPN to optimize the supply chain warehouse replenishment strategy.

Compared with the traditional warehouse management, the supply chain warehouse management is more adapted to the random changes of the distribution demand in the process control such as inventory cooperation and replenishment channels. Through the addition of replenishment classification and supplier cooperation, determination of goods grade and replenishment priority, setting of inventory threshold level and response of inventory abnormal changes, the supply chain warehousing replenishment process was continuously optimized. In the supply chain inventory state threshold setting and replenishment time process matching, this paper designed supply chain warehousing replenishment strategy algorithm, and built supply chain warehousing replenishment model based on SPN, and selected goods priority management strategy and replenishment strategy two key issues, functional analysis based on the algorithm, to clearly reflect the supply chain inventory state changes replenishment strategy dynamic response. Comparing the traditional warehouse replenishment model and SPN replenishment strategy model, the research results show that the overall benefit of SPN replenishment strategy model is better.

The change of supply chain structure affects the change of supply chain storage management demand, leading to the change of supply chain storage process. Therefore, the supply chain storage process and replenishment strategy designed in this paper will change with more random influence factors; Although this paper explored the SPN supply chain warehouse replenishment model and algorithm, the research on the supply chain warehouse replenishment model can be expanded from many aspects. Firstly, it can be further integrated with the ordering strategy optimization of external suppliers; Secondly, the inventory allocation problem of many different transportation strategies can be considered, and the transportation distribution, information processing and storage management can be organically integrated to carry out empirical analysis on the whole supply chain storage management system.

Acknowledgements. The authors gratefully acknowledge the support from the Huaqiao University High Level Talent Research Initiation Project through grants number 18SKBS203.

References

[1] A. Alptekinoğlu, A. Banerjee, A. Paul and N. Jain, Inventory pooling to deliver differentiated service. *Manuf. Serv. Oper. Manag.* **15** (2013) 33–44.

[2] R. Batarfi, M.Y. Jaber and C.H. Glock, Pricing and inventory decisions in a dual-channel supply chain with learning and forgetting. *Comput. Ind. Eng.* **136** (2019) 397–420.

[3] R. Behnamfar, S.M. Sajadi and M. Tootoonchy, Developing environmental hedging point policy with variable demand: A machine learning approach. *Int. J. Prod. Econ.* **254** (2022) 108640.

[4] H. Birkel and J.M. Müller, Potentials of industry 4.0 for supply chain management within the triple bottom line of sustainability-A systematic literature review. *J. Clean. Prod.* **289** (2021) 125612.

[5] A.G. De Kok, Hierarchical production planning for consumer goods. *Eur. J. Oper. Res.* **45** (1990) 55–69.

[6] N.K. Dev, R. Shankar and S. Swami, Diffusion of green products in industry 4.0: Reverse logistics issues during design of inventory and production planning system. *Int. J. Prod. Econ.* **223** (2020) 107519.

[7] D. Fan, Q. Xu, T. Fan and F. Cheng, Inventory optimization model considering consumer shift and inventory transshipment in dual-channel supply chains. *RAIRO: OR* **53** (2019) 59–79.

[8] G. Gao-feng, S. Hua-qian, Modeling and effectiveness analysis on business process collaboration of humanitarian relief supply chain based on stochastic Petri net. *J. Saf. Sci. Technol.* **9** (2017) 58–65.

[9] C.A. Garcia, A. Ibeas, J. Herrera and R. Vilanova, Inventory control for the supply chain: An adaptive control approach based on the identification of the lead-time. *Omega* **40** (2012) 314–327.

[10] N.T.M. Hanh, J.M. Chen and N. Van Hop, Pricing strategy and order quantity allocation with price-sensitive demand in three-echelon supply chain. *Expert Syst. Appl.* **206** (2022) 117873.

[11] B. Huang and S.M. Iravani, Optimal production and rationing decisions in supply chains with information sharing. *Oper. Res. Lett.* **35** (2007) 669–676.

[12] A.M. Jalal, E.A. Toso, C.P. Tautenhain and M.C. Nascimento, An integrated location-transportation problem under value-added tax issues in pharmaceutical distribution planning. *Expert Syst. Appl.* **206** (2022) 117780.

[13] A. Kanda and S.G. Deshmukh, Supply chain coordination: perspectives, empirical studies and research directions. *Int. J. Prod. Econ.* **115** (2008) 316–335.

[14] M. Karimi, H. Khademi-Zare, Y. Zare-Mehrjerdi and M.B. Fakhrzad, Optimizing service level, price, and inventory decisions for a supply chain with retailers competition and cooperation under VMI strategy. *RAIRO: OR* **56** (2022) 1051–1078.

[15] N. Khilwani, M.K. Tiwari and I. Sabuncuoglu, Hybrid Petri-nets for modelling and performance evaluation of supply chains. *Int. J. Prod. Res.* **49** (2011) 4627–4656.

[16] A.G. Lagodimos, Multi-echelon service models for inventory systems under different rationing policies. *Int. J. Prod. Econ.* **30** (1992) 939–956.

[17] A.G. Lagodimos and S. Koukoumialos, Service performance of two-echelon supply chains under linear rationing. *Int. J. Prod. Econ.* **112** (2008) 869–884.

[18] R. Liu and L. Zhao, Evolutionary game study on information nodes setting in supply chain tracing based on compensation mechanism. *RAIRO: OR* **56** (2022) 3405–3428.

[19] J. Liu, X. Liu, F. Wang, X. Ma and X. Yue, Equilibrium decisions and coordination of a logistics service supply chain with bilateral corporate social responsibility. *RAIRO: OR* **56** (2022) 2595–2612.

[20] S.V.S. Padiyar, V. Vandana, N. Bhagat, S.R. Singh and B. Sarkar, Joint replenishment strategy for deteriorating multi-item through multi-echelon supply chain model with imperfect production under imprecise and inflationary environment. *RAIRO: OR* **56** (2022) 3071–3096.

[21] B. Paul and C. Rajendran, Optimal and heuristic base-stock levels and rationing policy for a divergent supply chain. *Int. J. Ind. Syst. Eng.* **5** (2010) 460–484.

[22] S. Perotti, R.F.B. Santacruz, P. Bremer and J.E. Beer, Logistics 4.0 in warehousing: a conceptual framework of influencing factors, benefits and barriers. *Int. J. Logist. Manag.* **33** (2022) 193–220.

[23] T.F. Rodrigues, M.M. Dantas and C.A. Cavalcante, A dynamic inventory rationing policy for business-to-consumer e-tail stores in a supply disruption context. *Comput. Ind. Eng.* **142** (2020) 106379.

[24] A.B. Samii, Impact of nested inventory allocation policies in a newsvendor setting. *Int. J. Prod. Econ.* **181** (2016) 247–256.

[25] T. Sawik, On the fair optimization of cost and customer service level in a supply chain under disruption risks. *Omega* **53** (2015) 58–66.

[26] A.J. Schmitt, S.A. Sun, L.V. Snyder and Z.J.M. Shen, Centralization versus decentralization: Risk pooling, risk diversification, and supply chain disruptions. *Omega* **52** (2015) 201–212.

[27] N. Tahirov and C.H. Glock, Manufacturer encroachment and channel conflicts: A systematic review of the literature. *Eur. J. Oper. Res.* **302** (2022) 403–426.

[28] M. Taiping, Z. Peisi and D. Renhang, Modeling and performance analysis of manufacturing execution system basedon Petrinet. *Comput. Integr. Manuf. Syst.* **2l** (2015) 2064–2071.

[29] J.P. van der Gaast and F. Weidinger, A deep learning approach for the selection of an order picking system. *Eur. J. Oper. Res.* **302** (2022) 530–543.

[30] M.C. Van der Heijden, E.B. Diks and A.G. De Kok, Stock allocation in general multi-echelon distribution systems with (R, S) order-up-to-policies. *Int. J. Prod. Econ.* **49** (1997) 157–174.

[31] P. Wanke, H. Alvarenga, H. Correa, A. Hadi-Vencheh and M.A.K. Azad, Fuzzy inference systems and inventory allocation decisions: Exploring the impact of priority rules on total costs and service levels. *Expert Syst. Appl.* **85** (2017) 182–193.

[32] S.H. Zegordi and H. Davarzani, Developing a supply chain disruption analysis model: Application of colored Petri-nets. *Expert Syst. Appl.* **39** (2012) 2102–2111.